PRODUCT CATALOGUE

CRITICAL CARE

+ Active respiratory gas humidification
+ Breathing sets heated / unheated
+ nCPAP therapy for neonates
+ Patient interfaces

WILAmed A company of LÖWENSTEIN

Managers, decision-makers and healthcare professionals need clear information to quickly and easily select the right equipment for a wide range of treatment therapies in respiratory medicine.

Our product range reflects the knowledge we have gained over many years from hospitals in a wide range of countries.

If you have any questions about our products, please contact your WILAmed representative.

QUALITY BORN FROM PASSION

WILAmed products not only comply with legal medical technology standards but are also measured against our own strict quality requirements.

SUSTAINABLE PRODUCTION

Modern, environmentally friendly production facilities and manufacturing processes, social responsibility, and sustainable investments at our Germany location ensure consistent product and process quality at the highest level.

Made in Germany

OPTIMIZED SOLUTIONS

The result is perfectly coordinated products that ensure the best possible patient care.

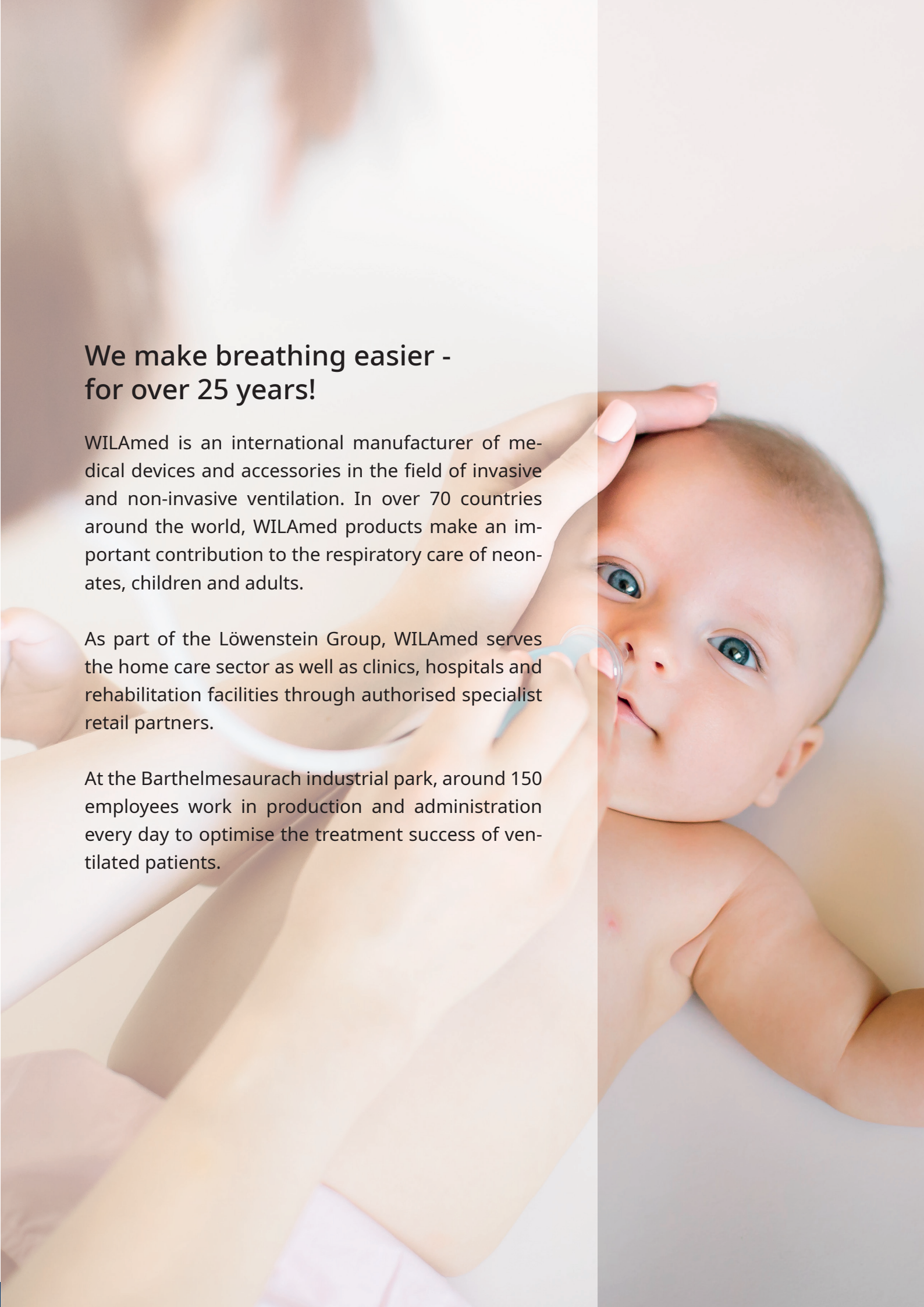

We make breathing easier - for over 25 years!

WILAmed is an international manufacturer of medical devices and accessories in the field of invasive and non-invasive ventilation. In over 70 countries around the world, WILAmed products make an important contribution to the respiratory care of neonates, children and adults.

As part of the Löwenstein Group, WILAmed serves the home care sector as well as clinics, hospitals and rehabilitation facilities through authorised specialist retail partners.

At the Barthelmesaurach industrial park, around 150 employees work in production and administration every day to optimise the treatment success of ventilated patients.

TABLE OF CONTENTS

ACTIVE RESPIRATORY GAS HUMIDIFIERS 5
MOUNTS & BRACKETS FOR HUMIDIFIERS 8
STERILE WATER 11

BREATHING SETS HEATED - DUAL LIMB 12
BREATHING SETS HEATED - DUAL LIMB NEO Device-specific 15
BREATHING SETS HEATED - SINGLE LIMB 22
HUMIDIFIER CHAMBERS 28

WILAFLOW ELITE NIV INFANT CPAP 30
WILAFLOW ELITE NIV INFANT CPAP ACCESSORIES 31
MECHANICAL OXYGEN MIXERS 36
MEDICAL ZGA TUBES 36

BREATHING SETS UNHEATED - DUAL LIMB 37
BREATHING SETS UNHEATED - SINGLE LIMB 39
BREATHING SETS UNHEATED - CLEARline for mechanical insufflator-exsufflator (MI-E) 40
DISPOSABLE PATIENT INTERFACES 41

The images are for illustrative purposes only.

„Treatment unit“ refers to a combination of products packaged together and marketed for use for a specific medical purpose.

All trademarks and brand names are the property of their respective owners.
Any use thereof does not imply affiliation with or endorsement by them.

ACTIVE RESPIRATORY GAS HUMIDIFIERS

AIRcon Gen2 Respiratory Humidifier

The **WILAmed AIRcon Gen2 respiratory humidifier** is an effective complete solution for optimal respiratory humidification of mechanically ventilated (invasive and non-invasive) patients.

By warming and humidifying the respiratory gas, the natural cleansing function of the lungs, mucociliary clearance, is supported. This effectively reduces the risk of pulmonary infections or damaged lung tissue is thus effectively reduced.

The comprehensively upgraded AIRcon Gen2 is one of the most advanced respiratory gas humidifiers currently available on the market.

As a fully equipped respiratory humidification set, the AIRcon Gen2 with its extensive range of accessories is quick and easy to install, ensuring safe operation.

The **AIRcon respiratory gas humidifier series** has been well received by healthcare professionals since 2010 – whether in intensive care or home ventilation.

Scope of delivery:

- Respiratory humidifier / basic unit
- Electric heating wire adapter (INSP and EXP)
- Temperature probe

Item	Part number	QTY
AIRcon Gen2 humidifier 220 - 240 V Version	101200	1
AIRcon Gen2 humidifier 110 - 120 V Version	101201	1

AIRniva Humidifier

The **WILAmed respiratory gas humidifier AIRniva** is an effective complete solution for optimal respiratory gas humidification of non-invasively ventilated patients.

By warming and humidifying the respiratory gas, the natural cleaning function of the lungs, known as mucociliary clearance, is supported.

This effectively reduces the risk of pulmonary infections or damage to lung tissue.

Scope of delivery:
- Heater Base / main unit
- Reusable Heater Wire Adapter INSP

Item	Part number	QTY
AIRniva humidifier 220 - 240 V Version	100500	1
AIRniva humidifier 110 - 120 V Version	100505	1

Dual Heater Wire Adapter INSP + EXP

Dual heating wire adapter for WILAmed dual limb sets.

Only for use on the AIRcon humidifier!

Item	Part number	QTY
Dual Heater Wire Adapter INSP + EXP	100929	1

Single Heater Wire Adapter INSP only

Heating wire adapter only for inspiratory heated WILAmed breathing sets.

Suitable for use on AIRcon and AIRniva.

Item	Part number	QTY
Single Heater Wire Adapter INSP only	100942	1

Temperature Probe

Suitable for use on AIRcon and AIRniva.

Item	Part number	QTY
Temperature Probe 160 cm	100910	1
Temperature Probe 180 cm	100909	1

MOUNTS & BRACKETS FOR HUMIDIFIERS

C-clamp

Our standard c-clamp is designed to mount horizontally or vertically on round surfaces (e.g. I.V. poles), with a maximum diameter of 40 mm.

Item	Part number	QTY
C-Clamp	550301	1

Mounting Bracket Kit for Norm Rail

Our angled attachment unit is intended, for example, for attaching the AIRcon respiratory gas humidifier to standard rails.

Item	Part number	QTY
Mounting Bracket Kit for Norm Rail	550247	1

Telescopic Water Bag Pole

Water bottle holder with telescopic rod and holder for respiratory gas humidifier, for attachment to standard rails in clinical and non-clinical environments.

Item	Part number	QTY
Water bottle holder with telescopic rod	550220	1

Biomed C-clamp

* Only available in selected markets.
Contact us for further information.

Biomed C-clamp is designed for fixing e.g. the oxygen mixer to infusion stands, with a maximum diameter of 40 mm.

Item	Part number	QTY
Biomed Blender Pole Mount C-Clamp	100358	1

Heavy Duty Stand IV-Pole

* Only available in selected markets.
Contact us for further information.

Heavy duty infusion stand made of stainless steel for use as a mobile equipment carrier such as oxygen mixers, respiratory gas humidifiers, etc., including 4 hooks for attaching sterile water, infusion solutions, etc.

Item	Part number	QTY
Heavy Duty Stand with five Casters and IV-Pole	550273	1

STERILE WATER

WILAqua sterile water

* Only available in selected markets.
Contact us for further information.

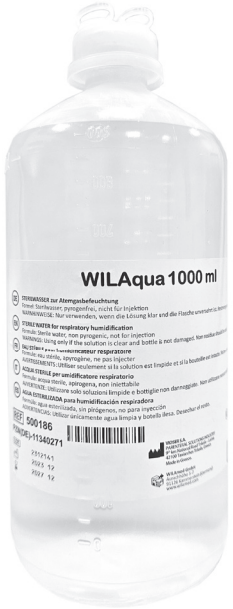

WILAqua sterile water is produced in state-of-the-art manufacturing facilities and has been specially developed to meet the demanding hygiene requirements of invasive and non-invasive ventilated patients. It is distilled sterile water.

Item	Part number	QTY
WILAqua sterile water for respiratory gas humidification, 1000 ml PE bottle	500186	10
WILAqua sterile water for respiratory gas humidification, 1000 ml PE bottle	5001862	660

NEW

WILAqua sterile water, oval bottle

* Only available in selected markets.
Contact us for further information.

Item	Part number	QTY
WILAqua sterile water for respiratory gas humidification, 1000 ml PE oval bottle	50018810	10
WILAqua sterile water for respiratory gas humidification, 1000 ml PE oval bottle	500188600	600

Breathing set heated, dual limb with Y-piece

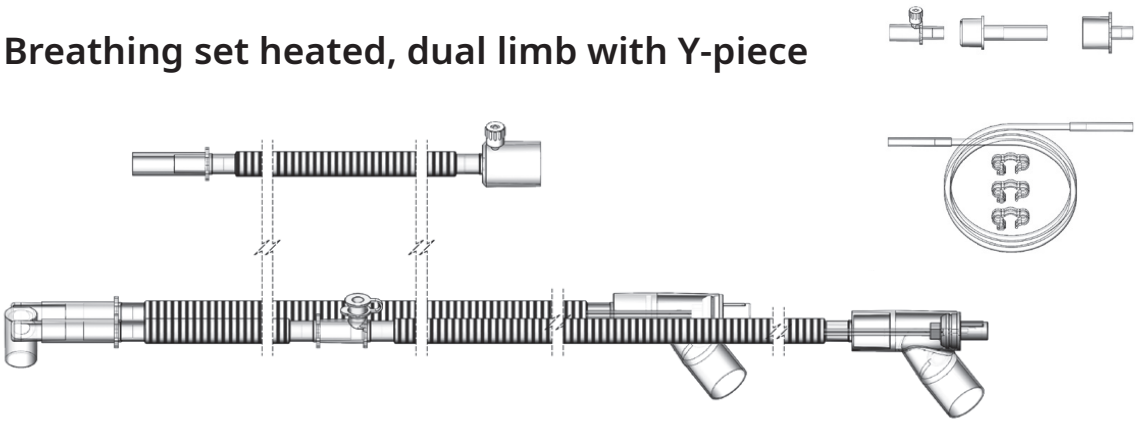

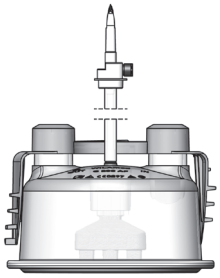

Description:	**Breathing set heated (i+e), dual limb** Y-piece with enclosed pressure line, incubator extension
Diameter:	10 mm
Length:	120 cm heated
Flow range:	2 - 15 l/min
Connecting tube:	60 cm
Humidification chamber:	C200AF Auto-fill, only suitable for use with **AIRcon Gen2**
Service life:	Disposable system, max. 7 days

NEO <10kg

Item	Part number	QTY
BTS1154A, Breathing set heated, incl. AF humidification chamber	27074510	10

Breathing set heated, dual limb with Y-piece

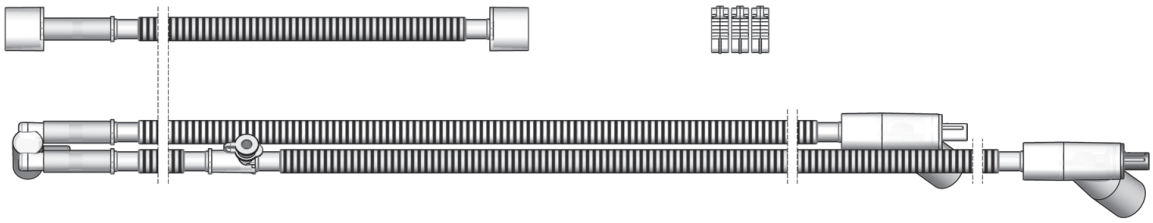

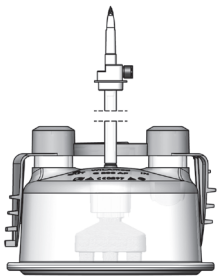

Description:	**Breathing set heated (i+e), dual limb** Y-piece, incubator extension
Diameter:	10 mm
Length:	120 cm heated
Flow range:	2 - 15 l/min
Connecting tube:	60 cm
Humidification chamber:	C200AF Auto-fill, only suitable for use with **AIRcon Gen2**
Service life:	Disposable system, max. 7 days

NEO <10kg

Item	Part number	QTY
BTS1122A, Breathing set heated, incl. AF humidification chamber	27070510	10

Breathing set heated, dual limb with Y-piece

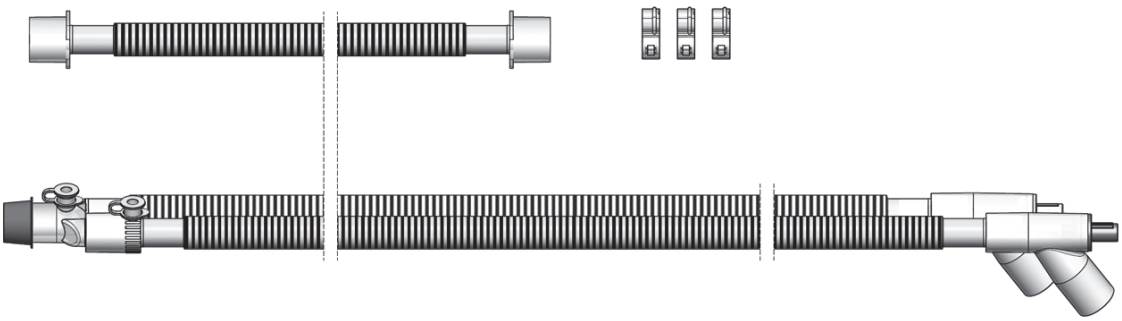

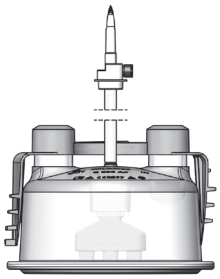

Description:	**Breathing set heated (i+e), dual limb**
	Y-piece
Diameter:	15 mm
Length:	150 cm heated coiled heating wire
Flow range:	3 - 30 l/min
Connecting tube:	60 cm
Humidification chamber:	C200AF Auto-fill, only suitable for use with **AIRcon Gen2**
Service life:	Disposable system, max. 7 days

Children

Item	Part number	QTY
BTS2260A, Breathing set heated, incl. AF humidification chamber	27176110	10

Breathing set heated, dual limb with Y-piece

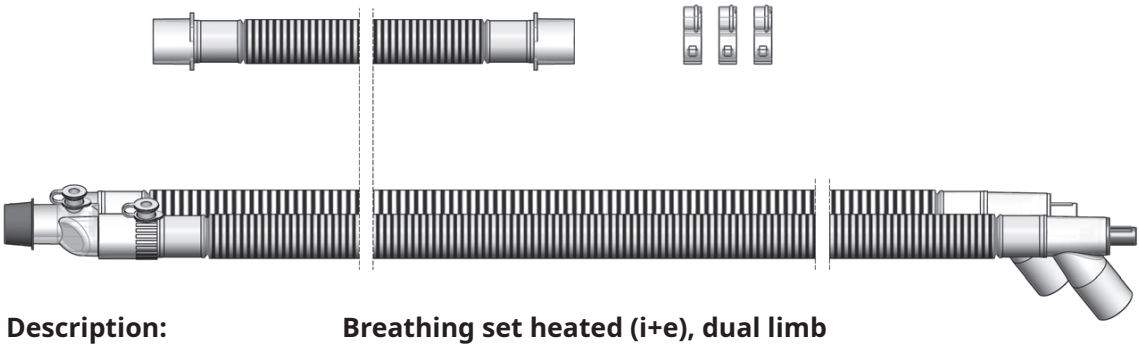

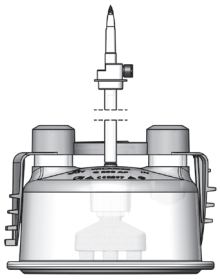

Description:	**Breathing set heated (i+e), dual limb**
	Y-piece
Diameter:	22 mm
Length:	150 cm heated coiled heating wire
Flow range:	4 - 80 l/min
Connecting tube:	60 cm
Humidification chamber:	C200AF Auto-fill, only suitable for use with **AIRcon Gen2**
Service life:	Disposable system, max. 7 days

Adults

Item	Part number	QTY
BTS3481A, Breathing set heated, incl. AF humidification chamber	27176010	10

NEW

Breathing set heated, dual limb with Y-piece, **XXXL (180 cm)***

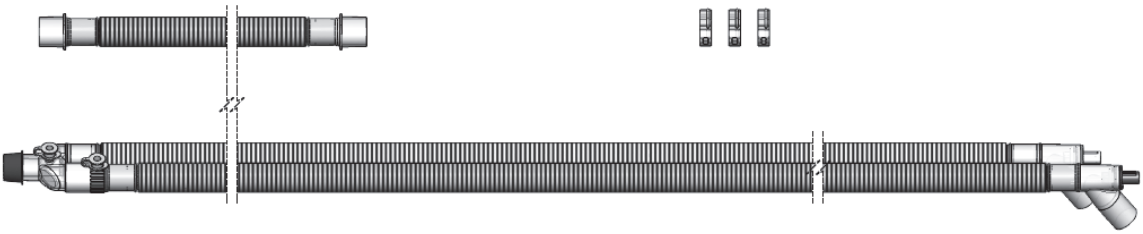

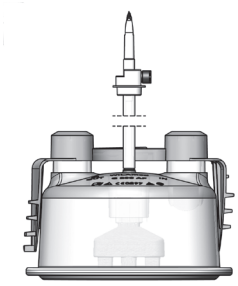

Description:	**Breathing set heated (i+e), dual limb**
	Y-piece
Diameter:	22 mm
Length:	**180 cm** heated coiled heating wire
Flow range:	4 - 80 l/min
Connecting tube:	60 cm
Humidification chamber:	C200AF Auto-fill, only suitable for use with **AIRcon Gen2**
Service life:	Disposable system, max. 7 days

Adults >25kg

Item	Part number	QTY
BTS3458A, Breathing set heated, incl. AF humidification chamber	27168610	10

* Can only be used with the 180 cm temperature probe (100909)

Breathing set heated, dual limb with Y-piece for LÖWENSTEIN Leoni plus + LEONI 4

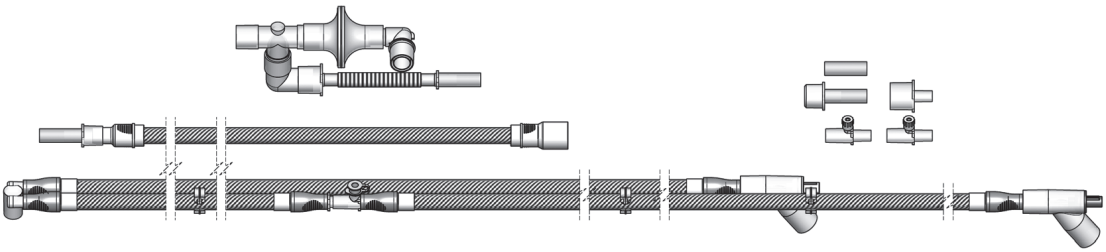

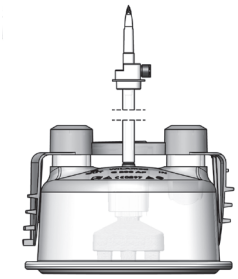

Description: **Breathing set heated (i+e), dual limb for LÖWENSTEIN Leoni plus + LEONI 4**
Y-piece with additional pressure line
Incubator extension, bacteria filter, **HFO kit**

Diameter: 10 mm
Length: 120 cm heated
Flow range: 2 - 15 l/min
Connecting tube: 60 cm
Humidification chamber: C200AF Auto-fill, only suitable for use with **AIRcon Gen2**
Service life: Disposable system, max. 7 days

NEO <10kg

Item	Part number	QTY
BTS1241A, Breathing set heated, incl. AF humidification chamber	27114910	10

NEW

Breathing set heated, dual limb, Helix heating technology, Y-piece, for LÖWENSTEIN Leoni plus + LEONI 4

requires at least Software 1.0.4

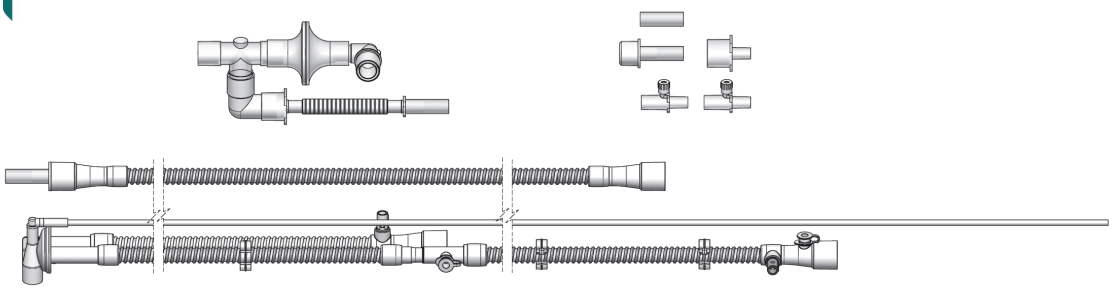

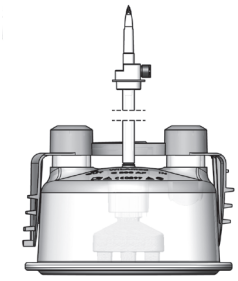

Description: **Breathing set heated (i+e), dual limb for LÖWENSTEIN Leoni plus + LEONI 4**
Rotatable Y-piece with additional pressure line
Incubator extension, bacteria filter, **HFO kit**

Diameter: 10 mm
Length: 150 cm heated, **Helix heating technology (HHT)**
Flow range: 2 - 15 l/min
Connecting tube: 60 cm
Humidification chamber: C200AF Auto-fill, only suitable for use with **AIRcon Gen2**
Service life: Disposable system, max. 7 days

NEO <10kg

Item	Part number	QTY
BTS4046A, Breathing set heated, incl. AF humidification chamber	27177910	10

Breathing set heated, dual limb, Y-piece, for LÖWENSTEIN elisa

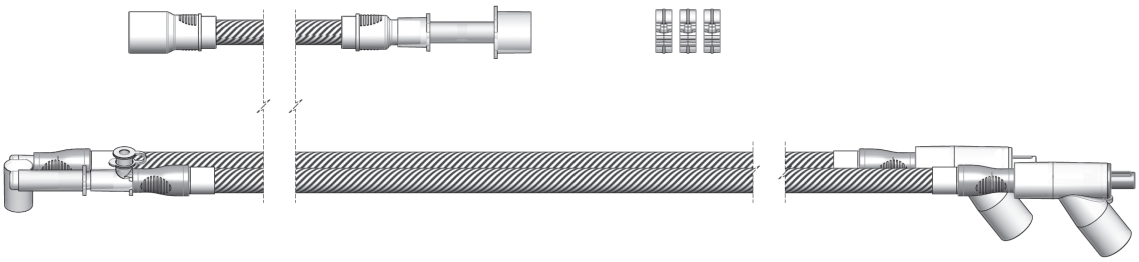

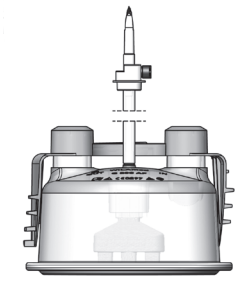

Description:	**Breathing set heated (i+e), dual limb for LÖWENSTEIN elisa** Y-piece
Diameter:	10 mm
Length:	120 cm heated
Flow range:	2 - 15 l/min
Connecting tube:	60 cm
Humidification chamber:	C200AF Auto-fill, only suitable for use with **AIRcon Gen2**
Service life:	Disposable system, max. 7 days

NEO <10kg

Item	Part number	QTY
BTS1279A, Breathing set heated, incl. AF humidification chamber	27121210	10

NEW

Breathing set heated, dual limb, Helix heating technology, Y-piece, for LÖWENSTEIN elisa

requires at least Software 1.0.4

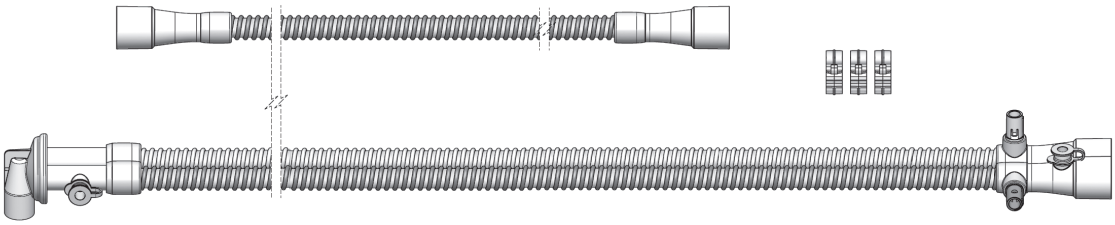

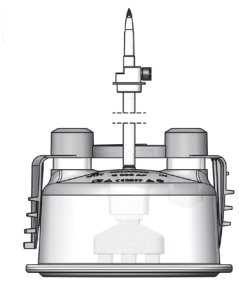

Description:	**Breathing set heated (i+e), dual limb for LÖWENSTEIN elisa** **Rotatable** Y-piece
Diameter:	10 mm
Length:	150 cm heated, **Helix heating technology (HHT)**
Flow range:	2 - 15 l/min
Connecting tube:	60 cm
Humidification chamber:	C200AF Auto-fill, only suitable for use with **AIRcon Gen2**
Service life:	Disposable system, max. 7 days

NEO <10kg

Item	Part number	QTY
BTS4049A, Breathing set heated, incl. AF humidification chamber	27178210	10

Breathing set heated, dual limb, Y-piece, for Dräger VN500 + VN600

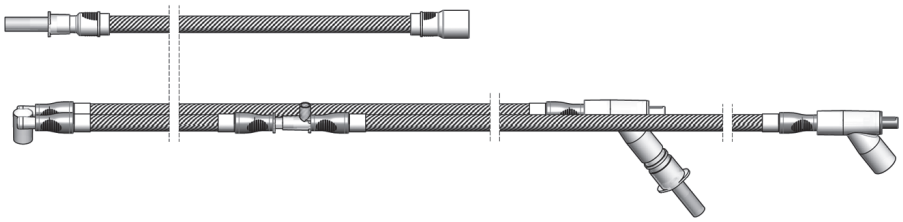

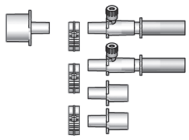

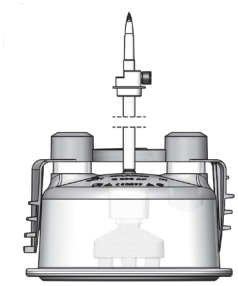

Description:	**Breathing set heated (i+e), dual limb for Dräger VN500 + VN600** Y-piece, incubator extension
Diameter:	10 mm
Length:	120 cm heated
Flow range:	2 - 15 l/min
Connecting tube:	60 cm
Humidification chamber:	C200AF Auto-fill, only suitable for use with **AIRcon Gen2**
Service life:	Disposable system, max. 7 days

NEO <10kg

Item	Part number	QTY
BTS1245A, Breathing set heated, incl. AF humidification chamber	27116310	10

NEW

Breathing set heated, dual limb, Helix heating technology, Y-piece, for Dräger VN500 + VN600

requires at least Software 1.0.4

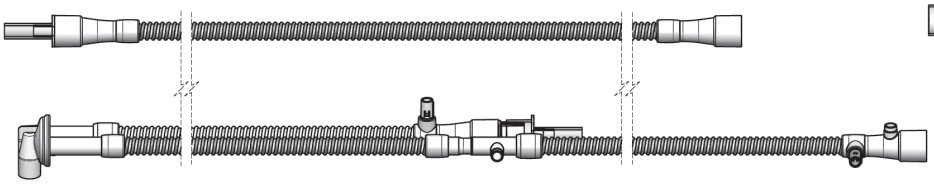

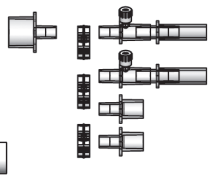

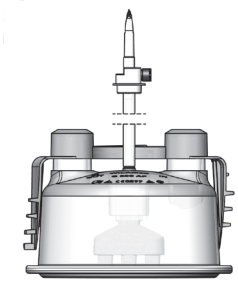

Description:	**Breathing set heated (i+e), dual limb for Dräger VN500 + VN600** **Rotatable** Y-piece, incubator extension
Diameter:	10 mm
Length:	150 cm heated, **Helix heating technology (HHT)**
Flow range:	2 - 15 l/min
Connecting tube:	60 cm
Humidification chamber:	C200AF Auto-fill, only suitable for use with **AIRcon Gen2**
Service life:	Disposable system, max. 7 days

NEO <10kg

Item	Part number	QTY
BTS4047A, Breathing set heated, incl. AF humidification chamber	27178010	10

Breathing set heated, dual limb, Y-piece, for VYAIRE Acutronic Fabian HFO

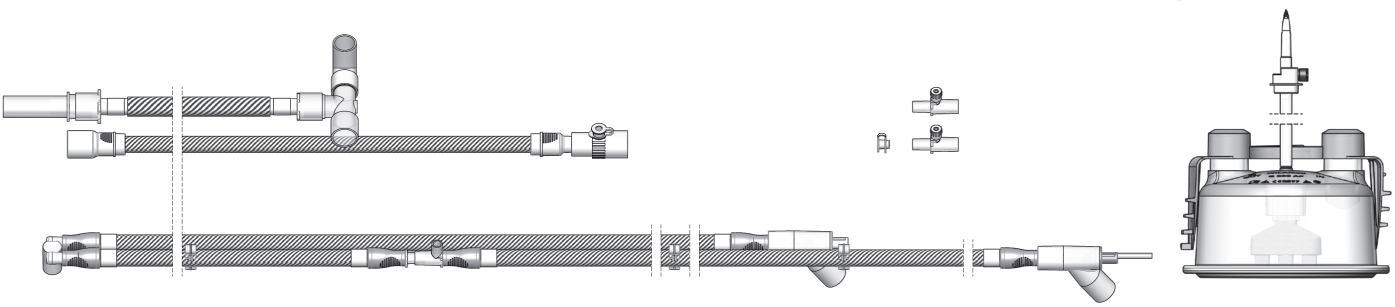

Description: **Breathing set heated (i+e), dual limb for VYAIRE Acutronic Fabian HFO**
Y-piece with pressure line, incubator extension
Diameter: 10 mm
Length: 120 cm heated
Flow range: 2 - 15 l/min
Connecting tube: 60 cm
Humidification chamber: C200AF Auto-fill, only suitable for use with **AIRcon Gen2**
Service life: Disposable system, max. 7 days

NEO <10kg

Item	Part number	QTY
BTS1252A, Breathing set heated, incl. AF humidification chamber	27117610	10

NEW

Breathing set heated, dual limb, Helix heating technology, Y-piece, for VYAIRE Acutronic Fabian HFO

requires at least Software 1.0.4

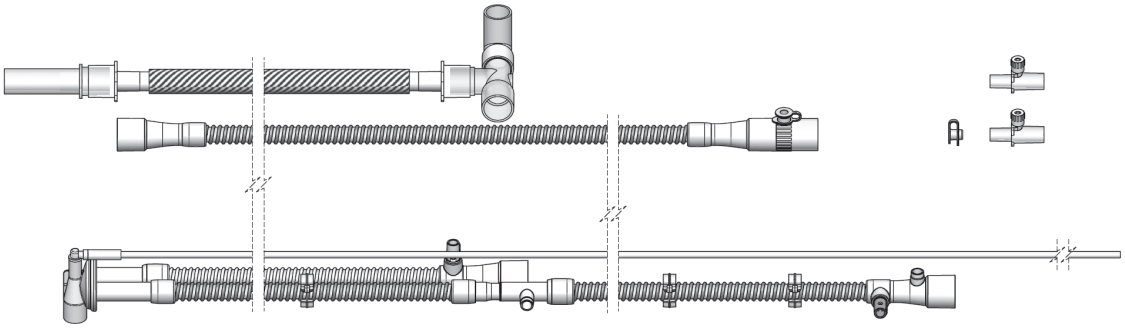

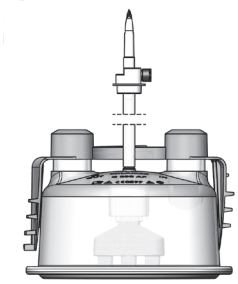

Description: **Breathing set heated (i+e), dual limb for VYAIRE Acutronic Fabian HFO**
Rotatable Y-piece with pressure line, incubator extension
Diameter: 10 mm
Length: 150 cm heated, **Helix heating technology (HHT)**
Flow range: 2 - 15 l/min
Connecting tube: 60 cm
Humidification chamber: C200AF Auto-fill, only suitable for use with **AIRcon Gen2**
Service life: Disposable system, max. 7 days

NEO <10kg

Item	Part number	QTY
BTS4048A, Breathing set heated, incl. AF humidification chamber	27178110	10

Breathing set heated, dual limb, Y-piece, for VYAIRE Acutronic Fabian HFO

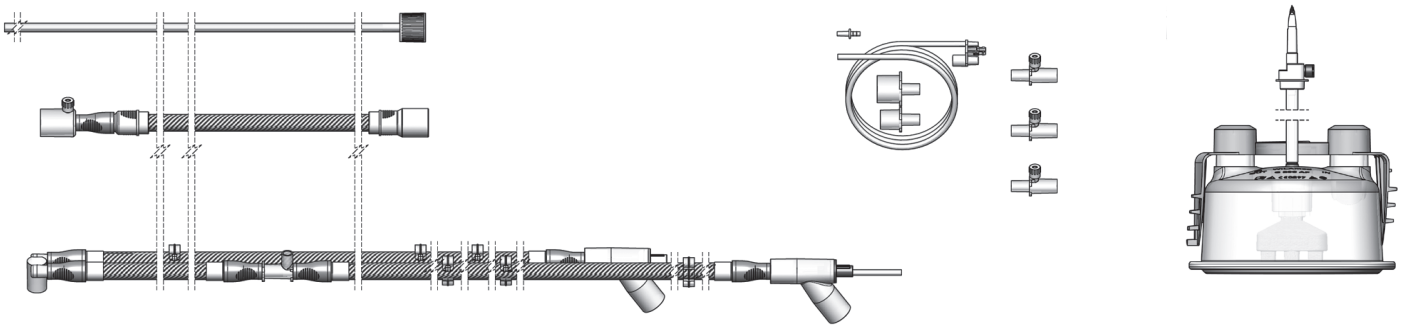

Description:	**Breathing set heated (i+e), dual limb for VYAIRE Acutronic Fabian HFO** Y-piece with pressure line, incubator extension, **HFO kit**
Diameter:	10 mm
Length:	120 cm heated
Flow range:	2 - 15 l/min
Connecting tube:	60 cm
Humidification chamber:	C200AF Auto-fill, only suitable for use with **AIRcon Gen2**
Service life:	Disposable system, max. 7 days

NEO <10kg

Item	Part number	QTY
BTS1347A, Breathing set heated, incl. AF humidification chamber	27171010	10

NEW

Breathing set heated, dual limb, Helix heating technology, Y-piece, for VYAIRE Acutronic Fabian HFO

requires at least Software 1.0.4

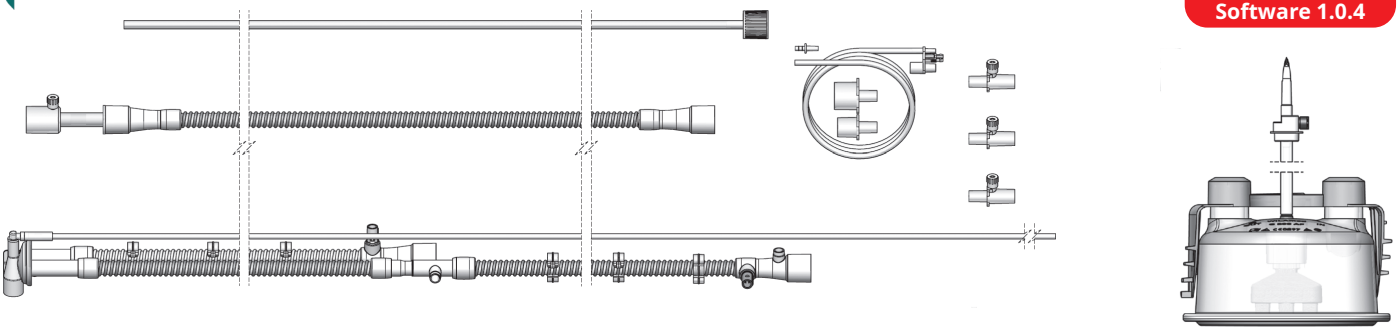

Description:	**Breathing set heated (i+e), dual limb for VYAIRE Acutronic Fabian HFO** **Rotatable** Y-piece with pressure line, incubator extension, **HFO kit**
Diameter:	10 mm
Length:	150 cm heated, **Helix heating technology (HHT)**
Flow range:	2 - 15 l/min
Connecting tube:	60 cm
Humidification chamber:	C200AF Auto-fill, only suitable for use with **AIRcon Gen2**
Service life:	Disposable system, max. 7 days

NEO <10kg

Item	Part number	QTY
BTS1370A, Breathing set heated, incl. AF humidification chamber	27178410	10

Breathing set heated, dual limb with Y-piece for SLE 5000/6000

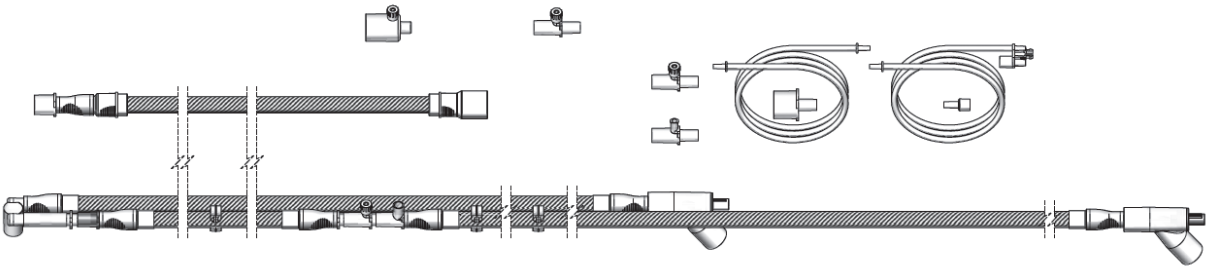

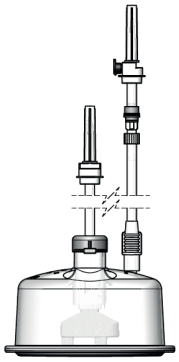

Description: **Breathing set heated (i+e), dual limb for SLE 5000/6000**
Y-piece with additional pressure line, Incubator extension

NEO <10kg

Diameter: 10 mm
Length: 120 cm heated
Flow range: 2 - 15 l/min
Connecting tube: 60 cm
Humidification chamber: **C200AFP Auto-fill with pressure equalisation**, only suitable for use with **AIRcon Gen2**
Service life: Disposable system, max. 7 days

Item	Part number	QTY
BTS1321A, Breathing set heated, incl. AFP humidification chamber	27158710	10

NEW

Breathing set heated, dual limb, Helix heating technology, Y-piece, for SLE 5000/6000

requires at least Software 1.0.4

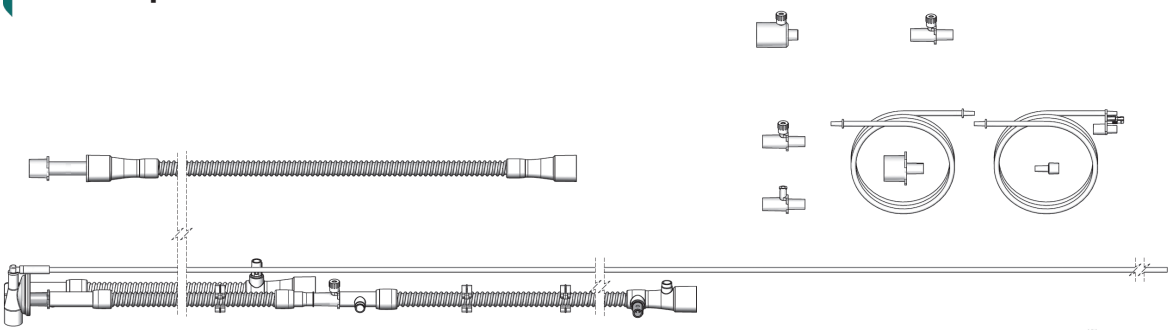

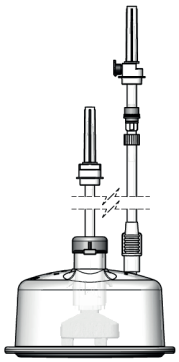

Description: **Breathing set heated (i+e), dual limb for SLE 5000/6000**
Rotatable Y-piece with additional pressure line,
Incubator extension

NEO <10kg

Diameter: 10 mm
Length: 150 cm heated, **Helix heating technology (HHT)**
Flow range: 2 - 15 l/min
Connecting tube: 60 cm
Humidification chamber: **C200AFP Auto-fill with pressure equalisation**, only suitable for use with **AIRcon Gen2**
Service life: Disposable system, max. 7 days

Item	Part number	QTY
BTS1369A, Breathing set heated, incl. AFP humidification chamber	27178310	10

Breathing set heated, dual limb with Y-piece for SLE 5000/6000

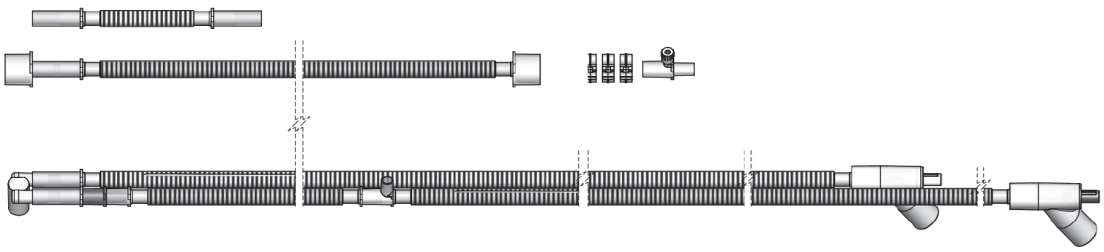

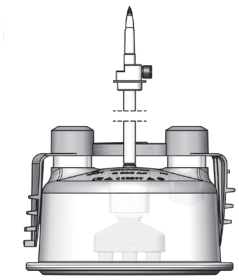

Description:	**Breathing set heated (i+e), dual limb for SLE 5000/6000** Y-piece, incubator extension, extension tube 40 cm, pressure line, T-piece with temperature port, flow limiter
Diameter:	10 mm
Length:	120 cm heated
Flow range:	2 - 15 l/min
Connecting tube:	60 cm
Humidification chamber:	C200AF Auto-fill, only suitable for use with **AIRcon Gen2**
Service life:	Disposable system, max. 7 days

NEO <10kg

Item	Part number	QTY
BTS1148A, Breathing set heated, incl. AF humidification chamber	27073910	10

Procedure pack for WILAflow Elite

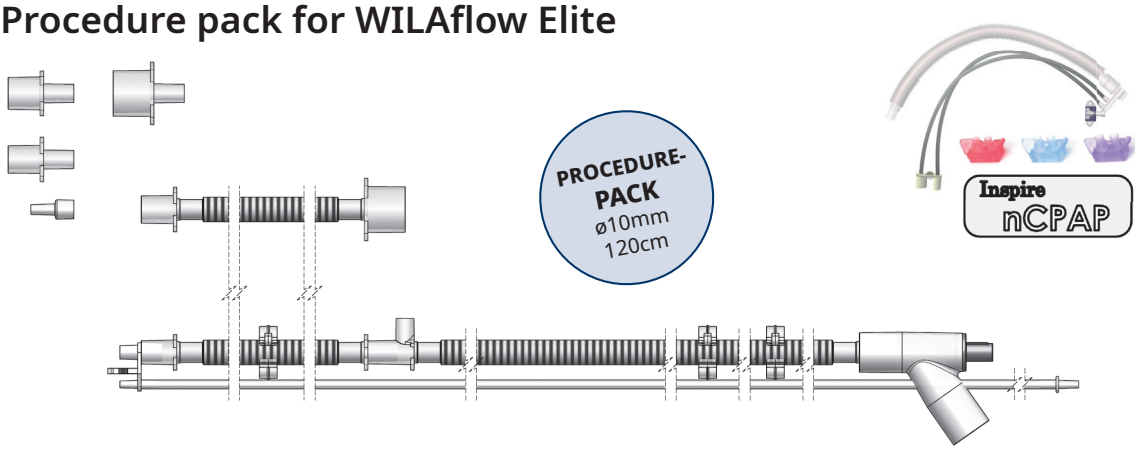

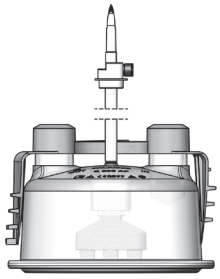

Description: **Breathing set heated (i), single-limb, humidifier chamber, Inspire nCPAP generator with prongs**

Diameter: 10 mm
Length: 120 cm heated
Flow range: 2 - 15 l/min
Connecting tube: 60 cm
Humidification chamber: C200AF Auto-fill, only suitable for use with **AIRcon Gen2**
Service life: Disposable system, max. 7 days

NEO <10kg

Item	Part number	QTY
1x Breathing set heated (REF 271543 / BTS1310A) 1x Inspire nCPAP generator with prongs (REF IHC600)	27077710	10

* Available for the CE area. Other countries on request.

Procedure pack for WILAflow Elite

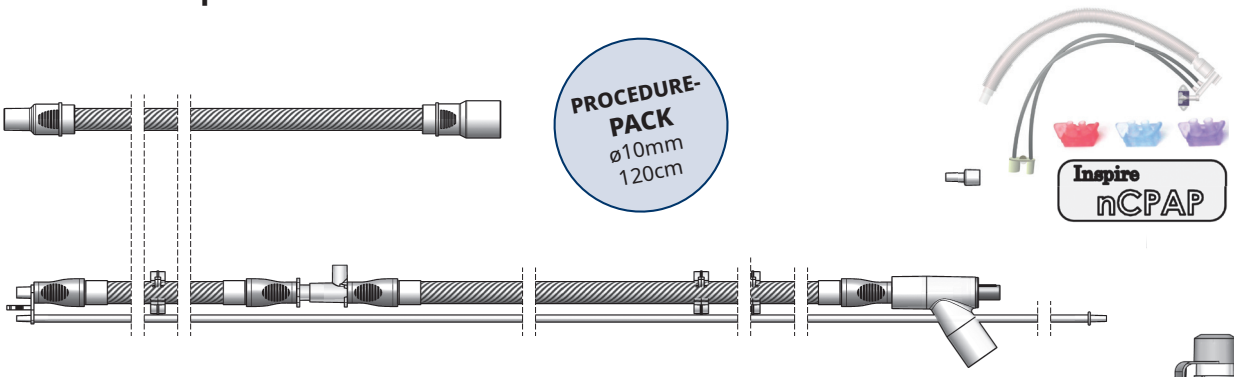

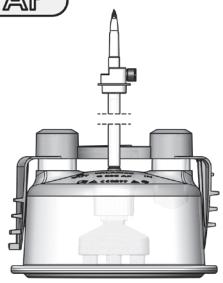

Description: **Breathing set heated (i), single-limb, humidifier chamber, Inspire nCPAP generator with prongs**

Diameter: 10 mm
Length: 120 cm heated
Flow range: 2 - 15 l/min
Connecting tube: 60 cm
Humidification chamber: C200AF Auto-fill, only suitable for use with **AIRcon Gen2**
Service life: Disposable system, max. 7 days

NEO <10kg

Item	Part number	QTY
1x Breathing set heated (REF 271754 / BTS1359A) 1x Inspire nCPAP generator with prongs (REF IHC600)	27175310	10

* Available for the CE area. Other countries on request.

Procedure pack for WILAflow Elite

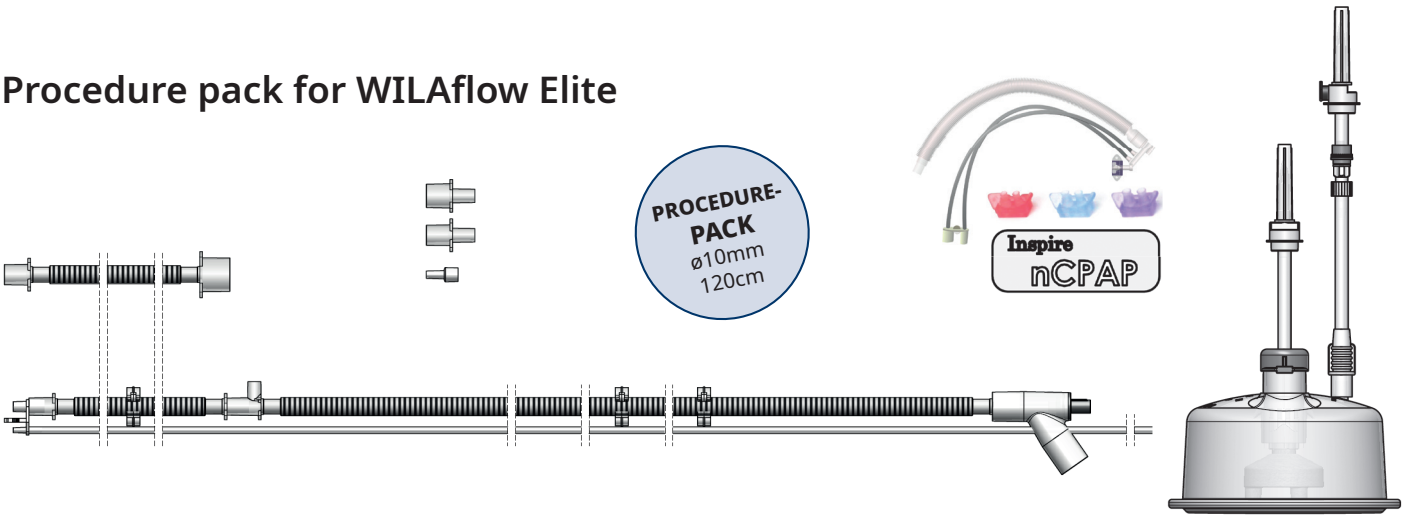

Description: **Breathing set heated (i), single-limb, humidifier chamber, Inspire nCPAP generator with prongs**

Diameter: 10 mm
Length: 120 cm heated
Flow range: 2 - 15 l/min
Connecting tube: 60 cm
Humidification chamber: **C200AFP Auto-fill with pressure equalisation,** only suitable for use with **AIRcon Gen2**
Service life: Disposable system, max. 7 days

NEO <10kg

Item	Part number	QTY
1x Breathing set heated, (REF 271767 / BTS4044A) 1x Inspire nCPAP generator with prongs (REF IHC600)	27177410	10

* Available for the CE area. Other countries on request.

Procedure pack for Acutronic fabian nCPAP

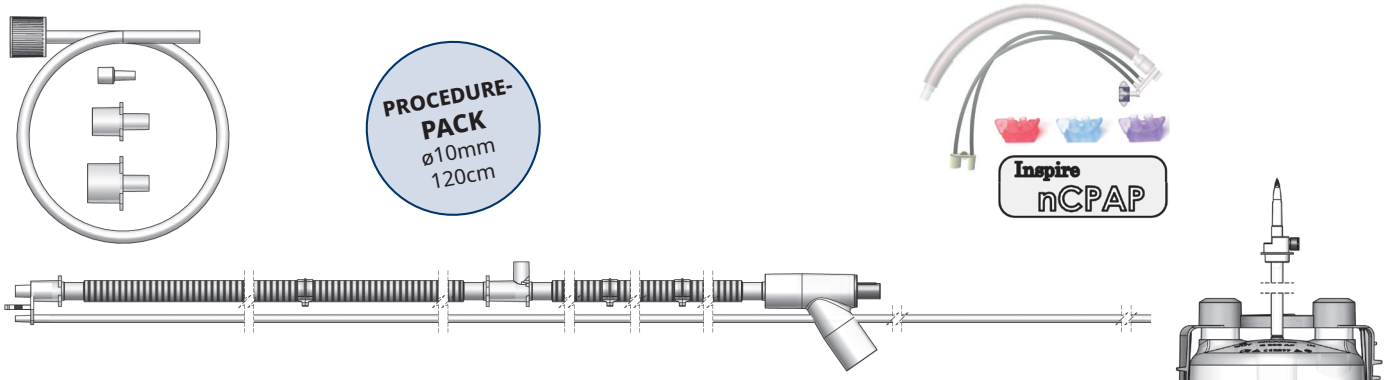

Description: **Breathing set heated (i), single-limb, humidifier chamber, Inspire nCPAP generator with prongs**

Diameter: 10 mm
Length: 120 cm heated
Flow range: 2 - 15 l/min
Connecting tube: 60 cm
Humidification chamber: C200AF Auto-fill, only suitable for use with **AIRcon Gen2**
Service life: Disposable system, max. 7 days

NEO <10kg

Item	Part number	QTY
1x Breathing set heated (REF 271717 / BTS1349A) 1x Inspire nCPAP generator with prongs (REF IHC600)	27112410	10

* Available for the CE area. Other countries on request.

Breathing set heated, single limb, for WILAflow Elite

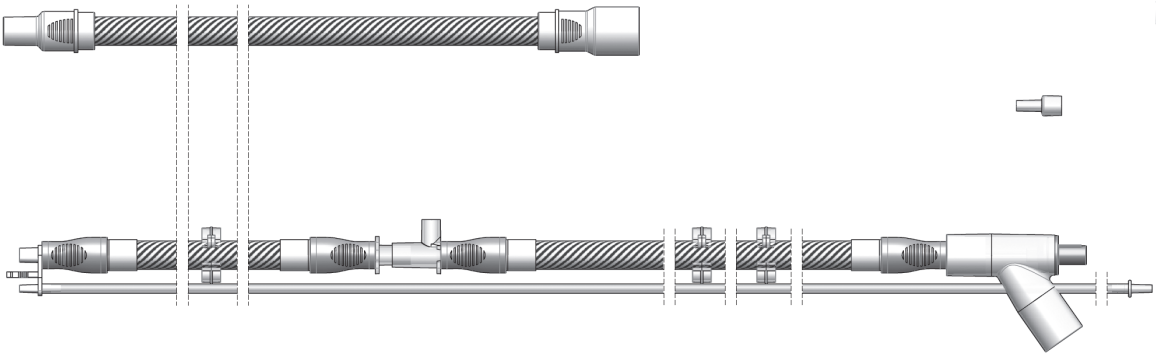

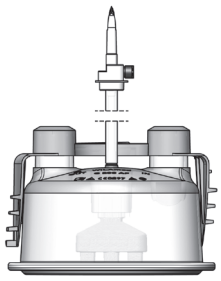

Description:	**Breathing set heated (i), single limb, for WILAflow Elite**
	Incubator extension
Diameter:	10 mm
Length:	120 cm heated
Flow range:	2 - 15 l/min
Connecting tube:	60 cm
Humidification chamber:	C200AF Auto-fill, only suitable for use with **AIRcon Gen2**
Service life:	Disposable system, max. 7 days

NEO <10kg

Item	Part number	QTY
BTS1359A, Breathing set heated, incl. AF humidification chamber	27175410	10

NEW

Breathing set heated, single limb, Helix heating technology, for WILAflow Elite

requires at least Software 1.0.4

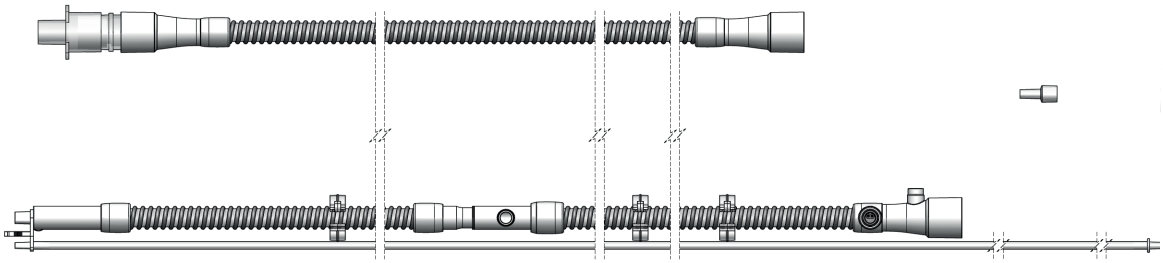

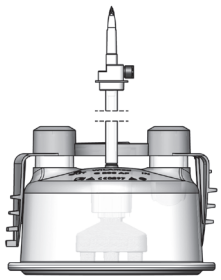

Description:	**Breathing set heated (i), single limb for WILAflow Elite**
	Incubator extension
Diameter:	10 mm
Length:	150 cm heated, **Helix heating technology (HHT)**
Flow range:	2 - 15 l/min
Connecting tube:	60 cm
Humidification chamber:	C200AF Auto-fill, only suitable for use with **AIRcon Gen2**
Service life:	Disposable system, max. 7 days

NEO <10kg

Item	Part number	QTY
BTS1371A, Breathing set heated, incl. AF humidification chamber	27178610	10

Breathing set heated, single limb, for O2 therapy

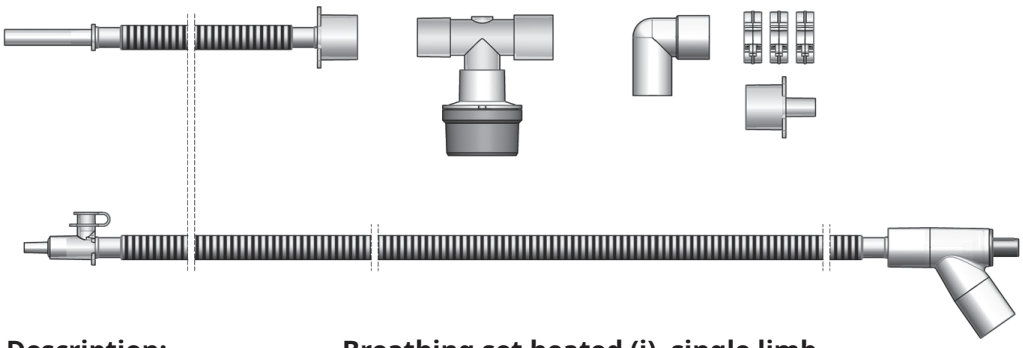

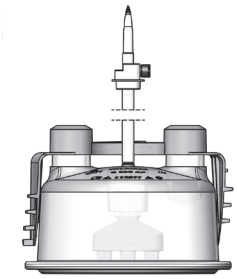

Description: **Breathing set heated (i), single limb**
Valve: Passive valve, Neo adapter
Diameter: 10 mm
Length: 120 cm heated
Flow range: 2 - 15 l/min
Connecting tube: 60 cm
Humidification chamber: C200AF Auto-fill, only suitable for use with **AIRcon Gen2**
Service life: Disposable system, max. 7 days

NEO <10kg

Item	Part number	QTY
BTS1307A, Breathing set heated, incl. AF humidification chamber	27150610	10

Breathing set heated, single limb, for vented masks and O2/high-flow therapy

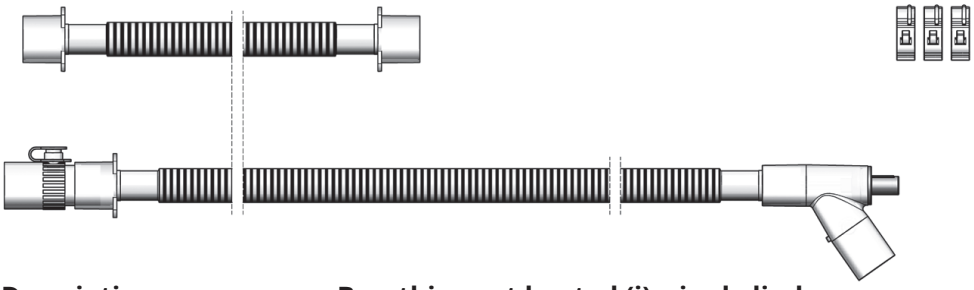

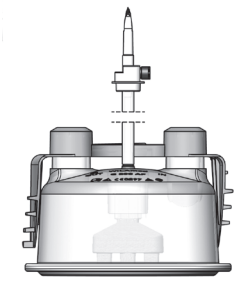

Description: **Breathing set heated (i), single limb**
Valve: N/A
Diameter: 15 mm
Length: 150 cm heated
Flow range: 3 - 30 l/min
Connecting tube: 60 cm
Humidification chamber: C200AF Auto-fill, only suitable for use with **AIRcon Gen2**
Service life: Disposable system, max. 7 days

Children 10kg ≤ 25kg

Item	Part number	QTY
BTS2171A, Breathing set heated, incl. AF humidification chamber	27151910	10

Breathing set heated, single limb, for vented masks or O2/high-flow therapy

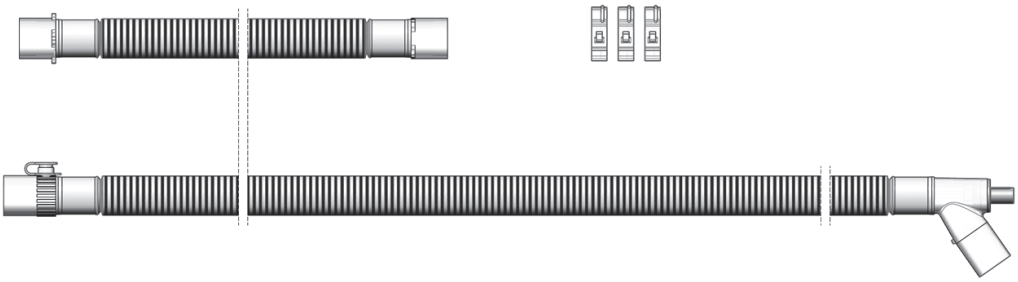

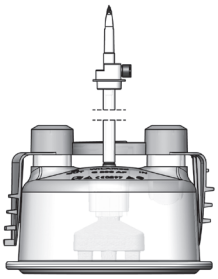

Description:	**Breathing set heated (i), single limb**
Diameter:	22 mm
Length:	150/180 cm heated
Flow range:	4 - 80 l/min
Connecting tube:	60 cm
Humidification chamber:	C200AF Auto-fill, only suitable for use with **AIRcon Gen2**
Service life:	Disposable system, max. 7 days

Adults >25kg

Item	Part number	QTY
BTS3234A, Breathing set heated, 150 cm, incl. AF humidification chamber	27112510	10
BTS3451A, Breathing set heated, 180 cm, incl. AF humidification chamber	27165710	10
* Can only be used with the 180 cm temperature probe (100909)		

Breathing set heated, single limb, for vented masks or O2/high-flow therapy

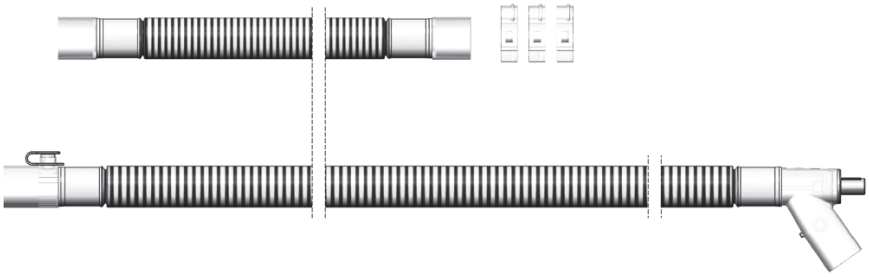

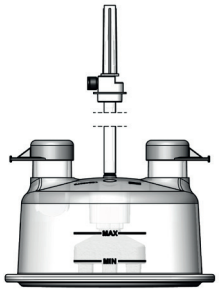

Description:	**Breathing set heated (i), single limb**
Valve:	N/A
Diameter:	22 mm
Length:	150/180 cm heated
Flow range:	4 - 80 l/min
Connecting tube:	60 cm
Humidification chamber:	C200AF Auto-fill, only suitable for use with **AIRniva**
Service life:	Disposable system, max. 7 days

Adults >25kg

Item	Part number	QTY
BTS3421A, Breathing set heated, incl. AF universal humidification chamber	27157910	10

Breathing set heated, single limb with passive valve WILAsilent 2

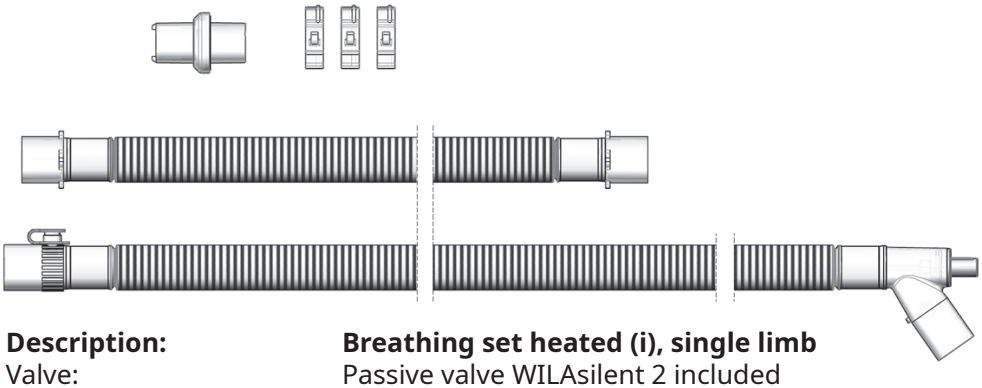

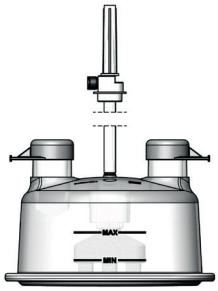

Description:	**Breathing set heated (i), single limb**
Valve:	Passive valve WILAsilent 2 included
Diameter:	22 mm
Length:	150 cm heated
Flow range:	4 - 80 l/min
Connecting tube:	60 cm
Humidification chamber:	C200AF Auto-fill universal, only suitable for use with **AIRniva**
Service life:	Disposable system, max. 7 days

Adults >25kg

Item	Part number	QTY
BTS8099A, Breathing set heated, incl. AF humidification chamber	27170510	10

Breathing set heated, single limb, passive valve with pressure measuring line for Philips V60

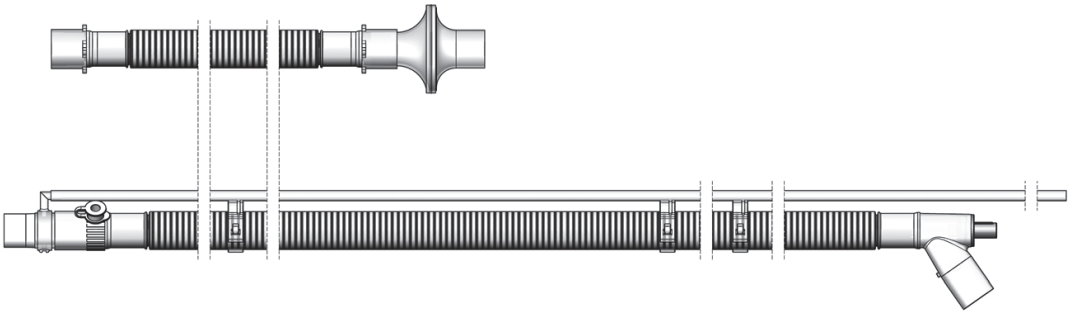

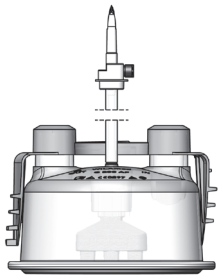

Description:	**Breathing set heated (i), single limb for Philips V60**
Valve:	passive valve with pressure line
Diameter:	22 mm
Length:	150/180 cm heated
Flow range:	4 - 80 l/min
Connecting tube:	60 cm with bacteria filter
Humidification chamber:	C200AF Auto-fill, only suitable for use with **AIRcon Gen2**
Service life:	Disposable system, max. 7 days

Adults >25kg

Item	Part number	QTY
BTS3218A, Breathing set heated, 150 cm, incl. AF humidification chamber	27075610	10
BTS3297A, Breathing set heated, 180 cm, incl. AF humidification chamber	27119610	10
* Can only be used with the 180 cm temperature probe (100909)		

HUMIDIFICATION CHAMBERS

The humidification chamber is an essential component of our heated breathing sets, so the two are also perfectly matched.

Thus, we ensure optimal respiratory gas conditioning for mechanically ventilated patients, both in clinical and non-clinical settings.

The C200AF Auto-Fill humidification chambers guarantee a constant water level, on the one hand due to our sophisticated float set inside the chamber and on the other hand due to the highly precise infrared water level monitoring of the AIRcon.

Our humidification chambers can be ordered individually or as part of a complete breathing set (convenience kit).

With our sterile water „WILaqua“ we can offer a closed set completely from one source.

C200AF AIRcon humidifier chamber

Auto-Fill humidifier chamber, for all patient groups.
For use with AIRcon respiratory gas humidifiers only.

Item	Part number	QTY
C200AF Auto-Fill humidifier chamber for AIRcon	50030030	30

C200AF Universal humidifier chamber

Auto-Fill humidifier chamber for all patient groups.
For use with AIRniva respiratory gas humidifiers.

Item	Part number	QTY
C200AF Auto-Fill Universal Humidifier Chamber	50038030	30

C200AFP Humidifier chamber with pressure equalisation

Auto-Fill humidifier chamber with pressure equalisation for all patient groups.
For use with AIRcon respiratory humidifiers only.

Item	Part number	QTY
C200AFP Auto-Fill humidifier chamber with pressure equalisation	50048024	24

WILAflow Elite NIV Ventilator

The WILAflow Elite is a ventilator that is used for non-invasive ventilation, such as nCPAP and nasal HiFlow O2 therapy, in premature and newborn infants in the hospital.

The use of nCPAP (a continuous positive airway pressure) is now considered the gold standard for respiratory support in preterm infants. The most common indications include respiratory distress syndrome and apneas. Application via binasal prongs or nasal mask is now considered the internationally validated standard.

WILAflow Elite ventilation modes: SNIPPV (Synchronized), NIPPV, nCPAP, HFNC

All accessories and consumables for the WILAflow Elite are available and are described on the following pages.

Scope of delivery:
- WILAflow Elite ventilator
- Tubing support arm
- Supply tree for sterile water
- Signal Box/IEC

Item	Part number	QTY
WILAflow Elite NIV ventilator with equipment trolley	101300	1

WILAFLOW ELITE NIV INFANT CPAP ACCESSORIES

WILAflow Elite Signal Box

* Only available in selected markets.
Engage for more information.

Item	Part number	QTY
WILAflow Elite Signal Box for Abdominal Sensor	101302	1

WILAflow Elite Body Sensor

* Only available in selected markets.
Engage for more information.

Item	Part number	QTY
WILAflow Elite Body Sensor VX010 100 cm	101301	5

Inspire nCPAP generator and nasal prongs, sizes S/M/L

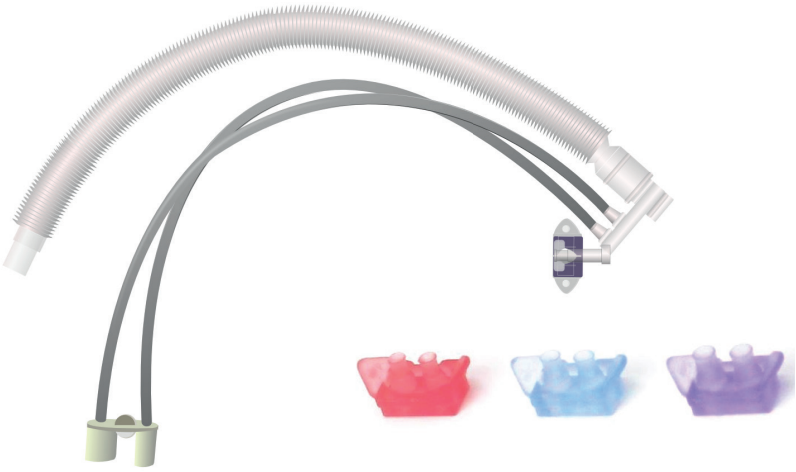

The fluidic flip principle, which has been known and proven for decades in the use of our CPAP generator, was developed specifically for infants and has established itself as the globally recognised gold standard in non-invasive ventilation for infants and premature babies.

Our WILAflow nCPAP generator comes with three nasal prongs: 1 x size S, 1 x size M and 1 x size L.

Item	Part number	QTY
WILAflow nCPAP Generator, incl. 3 nasal prongs (S, M, L)	300660	10

INSPIRE nCPAP Nasal Prong

Item	Part number	QTY
INSPIRE nCPAP Nasal Prong, size XS	300716	10
INSPIRE nCPAP Nasal Prong, size S	300712	10
INSPIRE nCPAP Nasal Prong, size M	300713	10
INSPIRE nCPAP Nasal Prong, size L	300714	10

INSPIRE nCPAP mask

Item	Part number	QTY
INSPIRE nCPAP Mask, size S	300710	10
INSPIRE nCPAP Mask, size M	300711	10
INSPIRE nCPAP Mask, size L	300708	10
INSPIRE nCPAP Mask, size XL	300709	10

WILAbonnets

For use in combination with our WILAflow nCPAP generator, our particularly soft, flexible and skin-friendly WILA-bonnets serve to optimally secure the nCPAP generator during nCPAP therapy.

Item	Part number	QTY
WILAbonnet, white, size 000, 18–20 cm	300720	10
WILAbonnet, grey, Size 00, 20 - 22 cm	300721	10
WILAbonnet, pink, size 0, 22–24 cm	300722	10
WILAbonnet, brown, Size 1, 24 - 26 cm	300723	10
WILAbonnet, yellow, Size 2, 26 - 28 cm	300724	10
WILAbonnet, blue, size 3, 28–30 cm	300725	10
WILAbonnet, light orange, Size 4, 30 - 32 cm	300726	10
WILAbonnet, green, Size 5, 32 - 34 cm	300727	10
WILAbonnet, red, size 6, 34–36 cm	300728	10
WILAbonnet, orange, size 7, 36–38 cm	300729	10
WILAbonnet, turquoise, size 8, 38–40 cm	300730	10
WILAbonnet, dark blue, size 9, 40–42 cm	300731	10

NeoJet nCPAP System

The nCPAP system for premature babies and infants.
The NeoJet system expands the range of applications for a wide variety of neonatal ventilators. The system offers noninvasive CPAP and nIPPV therapy to support central and obstructive apnoea and spontaneous breathing in premature babies and infants. NeoJet is based on the Benveniste principle and generates adjustable, constant positive pressure in the airways of small patients for maximum comfort.

NeoJet nCPAP generator (disposable)

Item	Part number	QTY
NeoJet nCPAP Generator (disposable)	201200	20

NeoJet Prongs

Item	Part number	QTY
NeoJet Prongs micro	201201	10
NeoJet Prongs small	201209	10
NeoJet Prongs medium	201202	10
NeoJet Prongs medium width	201211	10
NeoJet Prongs large	201210	10
NeoJet Prongs Xlarge	201203	10

NeoJet masks

Item	Part number	QTY
NeoJet mask, Xsmall	201208	10
NeoJet mask, small	201204	10
NeoJet mask, medium	201205	10
NeoJet mask, large	201206	10
NeoJet mask, Xlarge	201207	5

NeoJet fixation cap

Item	Part number	QTY
NeoJet fixation cap, XXS	201213	10
NeoJet fixation cap, very small	201214	10
NeoJet fixation cap, small, head circumference: 21 - 23 cm	201215	10
NeoJet fixation cap, medium, head circumference: 23 - 25.5 cm	201216	10
NeoJet fixation cap, large, head circumference: 25.5 - 28 cm	201217	10
NeoJet fixation cap, X large, head circumference: 28 - 30 cm	201218	10
NeoJet fixation cap, XX large, head circumference: 30 - 33 cm	201219	10
NeoJet fixation cap, XXX large	201220	10
Neojet Neofoam foam wedge	201224	10

MECHANICAL OXYGEN MIXERS

Biomed Mixer

WILAmed/Biomed Devices Oxygen mixers for neonatal and paediatric intensive care units with flow meters from 3 to 15 LPM, for low- and high-flow oxygen therapy.

WILAmed/Biomed Devices high-flow oxygen mixers have been specially designed for nasal high-flow therapy in combination with active respiratory gas humidification (WILAmed AIRcon). The blender has a flow meter of up to 70 litres per minute, making it the perfect solution for nasal high-flow therapy for adults.

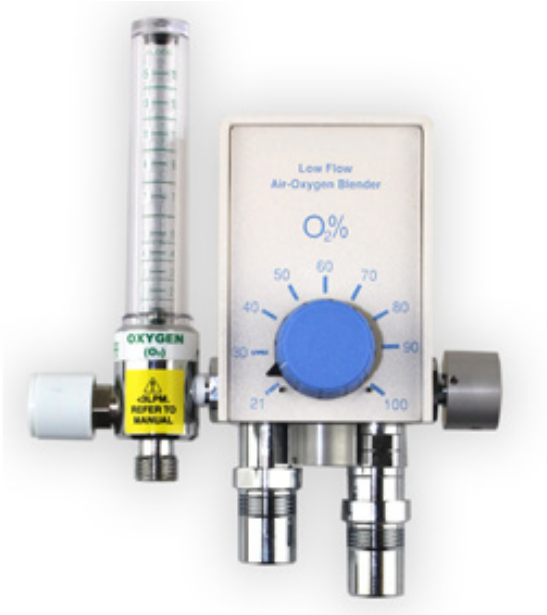

Item	Part number	QTY
Biomed NEOblend mixer with flow meter up to 15 LPM	100356	1
Biomed high-flow mixer with flow meter 70 LPM	100357	1

MEDICAL ZGA TUBES

O2 and AIR

ZV tubes for WILAmed ventilators for compressed air and oxygen in ISO32 black.

Our ZV tubes impress with their lasting and uncompromising reliability and offer absolute safety for people and machines.

Item	Part number	QTY
O2 Medical ZGA tube, NIST/DIN, white, 3 m	101577	1
AIR Medical ZGA tube, NIST/DIN, black, 3 m	100666	1

Breathing set unheated, dual limb, with Y-piece

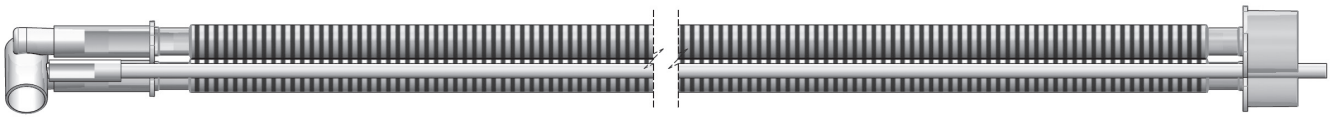

Description:	**Breathing set unheated, dual limb**
	Y-piece with pressure line
Diameter:	10 mm
Length:	120 cm
Flow range:	2 - 15 l/min
Service life:	Disposable system, max. 7 days

NEO <10kg

Item	Part number	QTY
BTS100, Breathing set unheated	27033010	10

Breathing set unheated, dual limb, with Y-piece

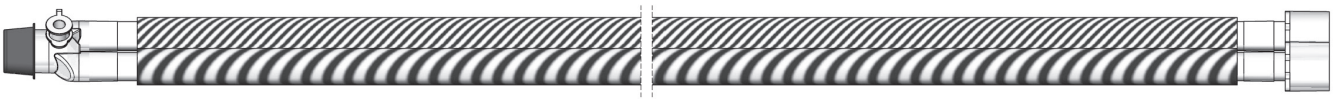

Description:	**Breathing set unheated, dual limb**
	Y-piece
Diameter:	15 mm
Length:	150 cm
Flow range:	3 - 30 l/min
Service life:	Disposable system, max. 7 days

Children 10kg ≤ 25kg

Item	Part number	QTY
BTS200, Breathing set unheated	27032910	10

Breathing set unheated, dual limb, with Y-piece

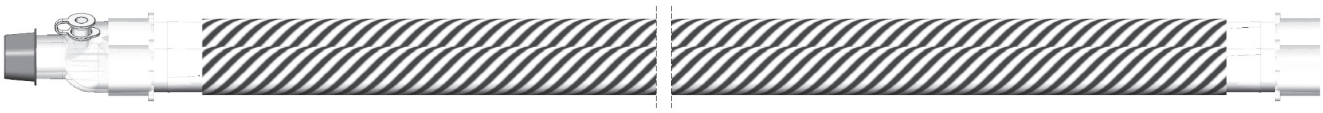

Description:	**Breathing set unheated, dual limb**
	Y-piece
Diameter:	22 mm
Length:	180 cm
Flow range:	4 - 80 l/min
Service life:	Disposable system, max. 7 days

Item	Part number	QTY
BTS300, Breathing set unheated	27100310	10

Breathing set unheated, single-limb, with passive exhalation valve WILAsilent 2, for PHILIPS RESPIRONICS Trilogy 100

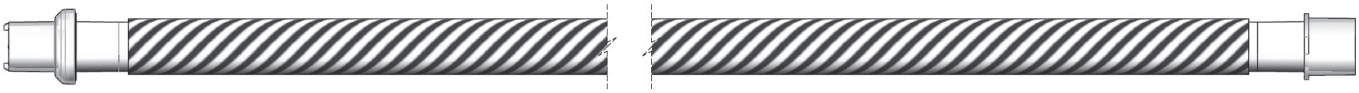

Description:	**Breathing set unheated, single limb**
Valve:	Passive exhalation valve WILAsilent 2
Diameter:	22 mm
Length:	180 cm
Flow range:	4 - 80 l/min
Service life:	Disposable system, max. 7 days

Adults >25kg

Item	Part number	QTY
BTS3157, Breathing set unheated	27065510	10

Breathing set unheated, single-limb, with passive exhalation valve WILAsilent 2, for PHILIPS RESPIRONICS Trilogy 100

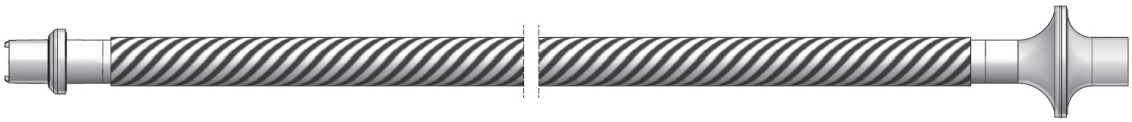

Description:	**Breathing set unheated, single limb includes bacteria/virus filter**
Valve:	Passive exhalation valve WILAsilent 2
Diameter:	22 mm
Length:	180 cm
Flow range:	4 - 80 l/min
Service life:	Disposable system, max. 7 days

Adults >25kg

Item	Part number	QTY
BTS3155, Breathing set unheated	27065010	10

CLEARline

For use with mechanical insufflator-exsufflator (MI-E)
LÖWENSTEIN CARO, PHILIPS RESPIRONICS Cough Assist E70

Breathing set unheated, single limb

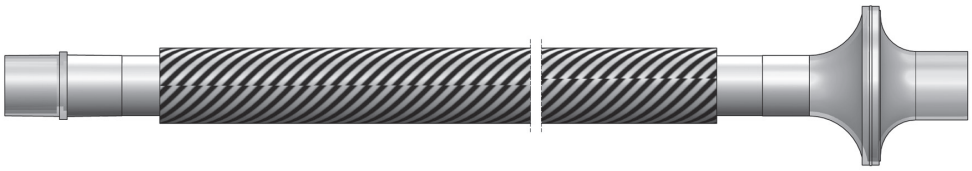

Description: **Breathing set unheated, single limb**
for mechanical insufflator-exsufflator (MI-E)
Diameter: 22 mm with smooth lumen
Length: 180 cm
Service life: Disposable system, max. 7 days

Item	Part number	QTY
BTS3301, Breathing set unheated	27093110	10

Breathing set unheated, single limb

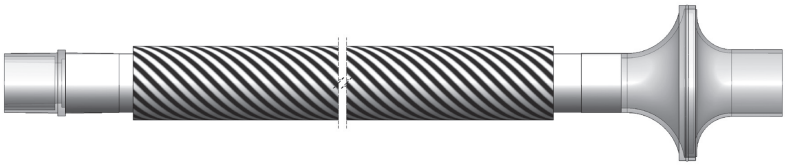

Description: **Breathing set unheated, single limb**
for mechanical insufflator-exsufflator (MI-E)
Diameter: 22 mm with smooth lumen
Length: 90 cm
Service life: Disposable system, max. 7 days

Item	Part number	QTY
BTS834 , Breathing set unheated	27119110	10

DISPOSABLE PATIENT INTERFACES

Our extensive range of patient interfaces for non-invasive ventilation therapy is full of ideas and innovations and offers optimal wearing comfort for the patient, which contributes significantly to the success of the therapy.

Ventura Total Full Face Masks

WILAmed's Ventura Total Face Masks have been developed and manufactured with patient comfort in mind. Our VENTURA breathing masks are less intimidating than other full-face masks because they are open-cut, enabling better treatment outcomes for anxious or claustrophobic patients.

Item	Part number	QTY
Ventura TFM NV/SBE (blue), size S	201112	1
Ventura TFM NV/SBE (blue), Size M	201111	1
Ventura TFM NV/SBE (blue), size L	201110	1
Ventura TFM CPAP/AAV (clear), size S	201113	1
Ventura TFM CPAP/AAV (clear), size M	201114	1
Ventura TFM CPAP/AAV (clear), size L	201115	1
Ventura TFM NV/AAV (yellow), size S	201107	1
Ventura TFM NV/AAV (yellow), size M	201108	1
Ventura TFM NV/AAV (yellow), size L	201109	1

JOYCEclinic Full Face Masks

* Contact us for further information.

The single-patient-use full-face mask for non-invasive acute ventilation enables quick and easy mask adjustment as well as a secure and comfortable mask fit – even at pressures of up to 50 hPa. The headgear, which remains stable even at high pressures, can be quickly and easily released in an emergency using a clearly visible ripcord.

The JOYCEclinic Full Face is available pre-assembled in 3 sizes in the variants non-vented, non-vented with AAV and vented with AAV. The correct size can be determined quickly and reliably using the fitting template – thanks to the two-chamber bag, without even touching the mask.

Item	Part number	QTY
JOYCEclinic Full Face NV AAV, size S	250240	1
JOYCEclinic Full Face NV AAV, size M	250241	1
JOYCEclinic Full Face NV AAV, size L	250242	1
JOYCEclinic Full Face NV, size S	250243	1
JOYCEclinic Full Face NV, size M	250244	1
JOYCEclinic Full Face NV, size L	250245	1
JOYCEclinic Full Face vented, size S	250246	1
JOYCEclinic Full Face Vented, Size M	250247	1
JOYCEclinic Full Face vented, size L	250248	1

High flow nasal cannulas

* Only available in selected markets.
Contact us for further information.

Specifically designed for Nasal High Flow Therapy, the nasal cannula allows delivery of flow rates up to 80 liters per minute. Its compact, flexible design, together with its light weight and low noise, provides maximum patient comfort.

Item	Part number	QTY
High flow nasal cannula, size S	20123310	10
High flow nasal cannula, size M	20123410	10
High flow nasal cannula, size L	20123510	10

LMFlo2 High-Flow Nasal Cannulas

* Only available in selected markets.
Contact us for further information.

WILAmed offers a wide range of nasal cannulae for use in nasal high-flow oxygen therapy: from low flow rates when ventilating the smallest patients to very high flow rates for adults.

Item	Part number	QTY
LMFlo2 High-Flow Nasal Cannula, Size S (Adult)	201230	10
LMFlo2 High-Flow Nasal Cannula, Size M (Adult)	201231	10
LMFlo2 High-Flow Nasal Cannula, Size L (Adult)	201232	10

Catheter Mount

Tube extension with angled double rotary connector and suction bronchoscopy opening.
Fits all common endotracheal tubes, laryngeal masks and laryngeal tubes.

Item	Part number	QTY
Catheter Mount, 20 cm, 22M/15F-22F	270103131	31
Catheter Mount, 20 cm, 22M/15F-15M	270500131	31
Catheter Mount, 15 cm, 22M/15F-22F	270501131	31
Catheter Mount, 15 cm, 22M/15F-15M	270102131	31

PRODUCT CATALOGUE

WILAmed GmbH

Equipment for Professionals

Aurachhöhe 5-7
91126 Kammerstein, Germany

Tel.: +49(0)9178 99 69 99-0
E-Mail: info@wilamed.com
Web: www.wilamed.com

V 3.2 - 2026-07-27